Your Dream Dock Starts Here
Easy To Build…Ready To Enjoy!

Roll-In Dock Kit Assembly Instructions

PO Box 1449
Wausau, WI 54402
715-842-3804
www.tommydocks.com

©2011 Tommy Docks® TD 0156_0511

Roll-In Dock Kit
Assembly Instructions

www.tommydocks.com

PARTS INCLUDED IN THIS KIT

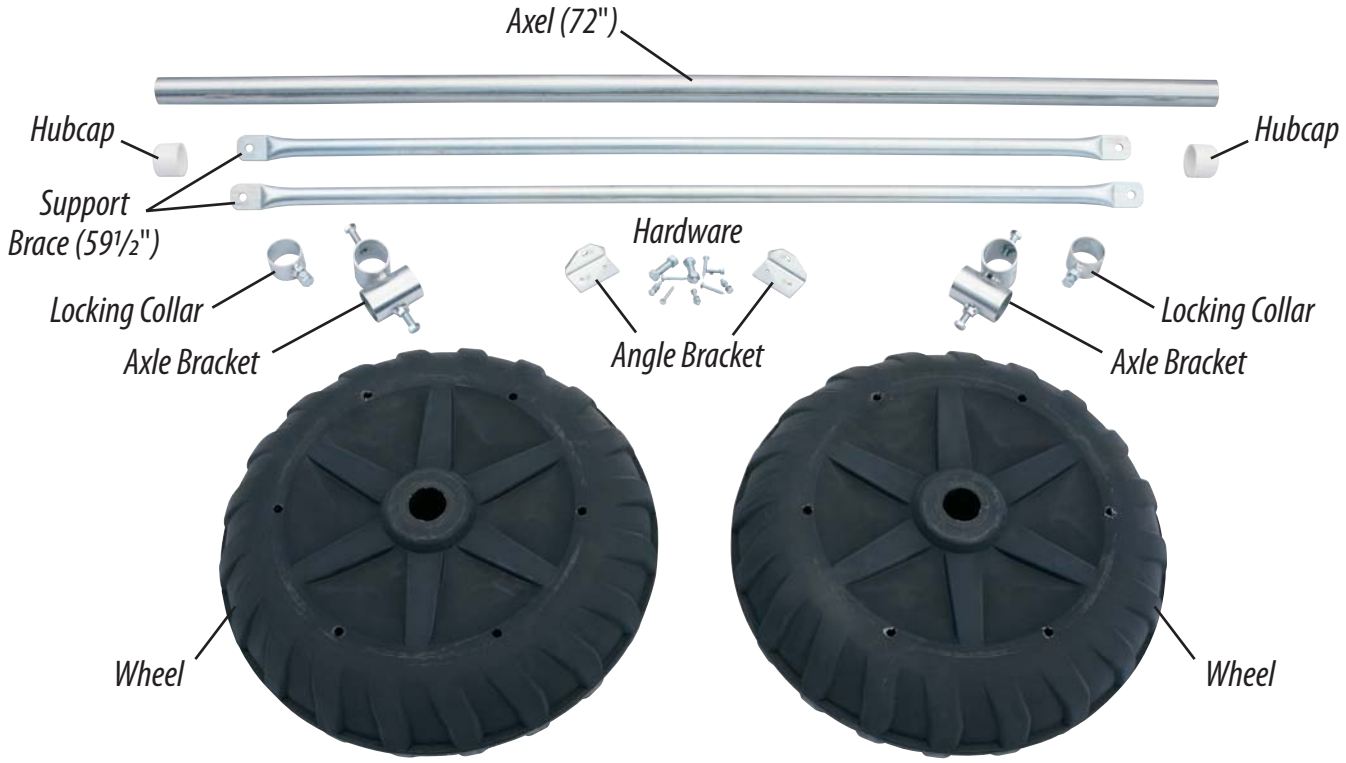

PARTS LIST

(2) Wheels

(1) 72" Long Axle

(2) Plastic Hubcaps

(2) 59½" Long Support Braces

(2) Axle Brackets with ½" Bolts

(2) Locking Collars with ½" Bolts

(2) Angle Brackets

(2) ½" x 1½" Hexhead Bolts and Nuts

(4) ¼" x 1½" Lagbolts *(for bolting angle brackets to a wood frame dock)*

(4) ¼" x 1" Hexhead Bolts, Nuts and Lockwashers *(for bolting angle brackets to a metal frame dock)*

TOOLS NEEDED

(2) 7/16" Wrenches

(2) ¾" Wrenches

Hammer *(to tap hubcaps onto the ends of the axle)*

Tape Measure

Side View of Assembled Roll-In Dock Kit

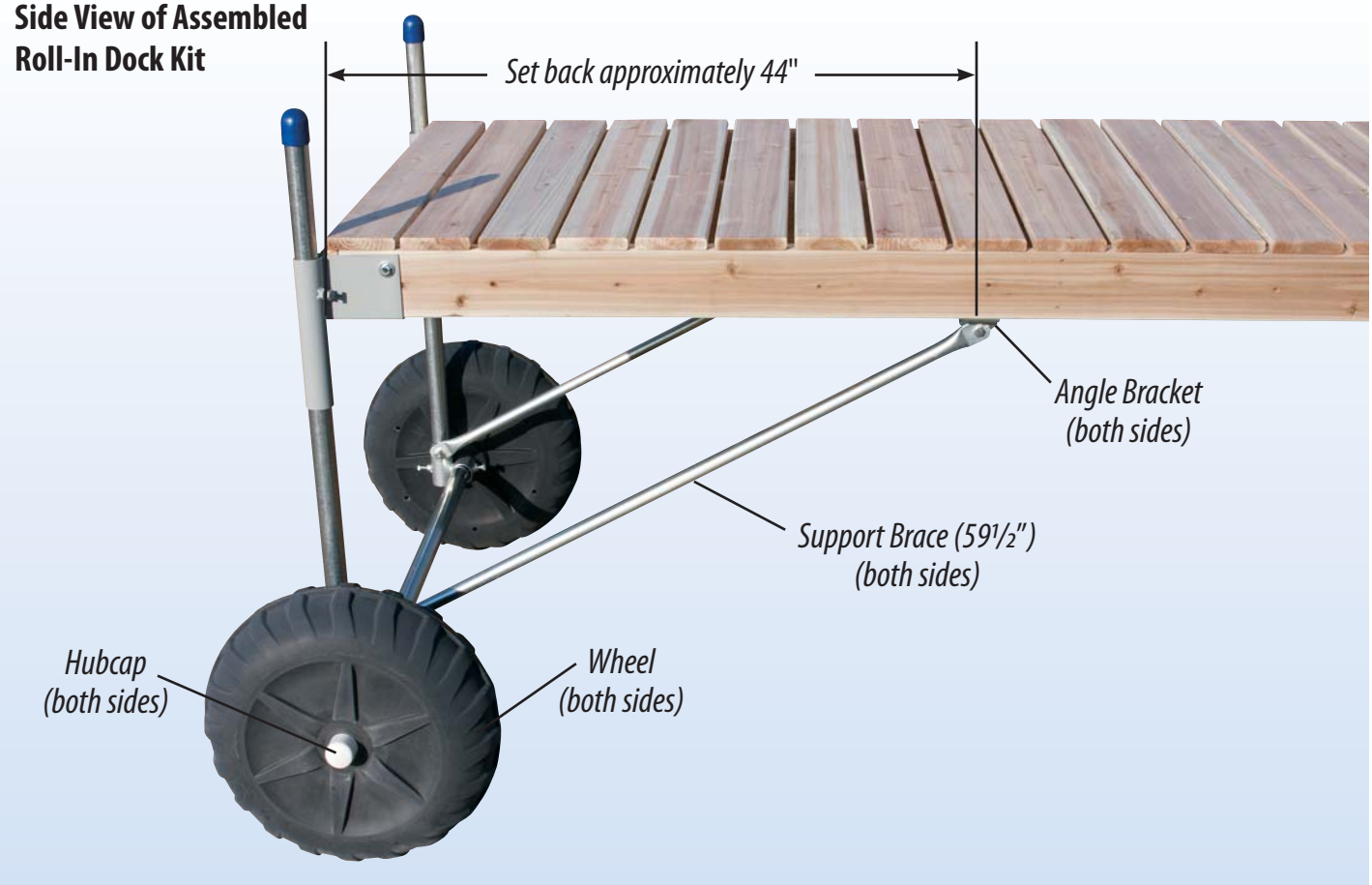

Front View of Assembled Roll-In Dock Kit

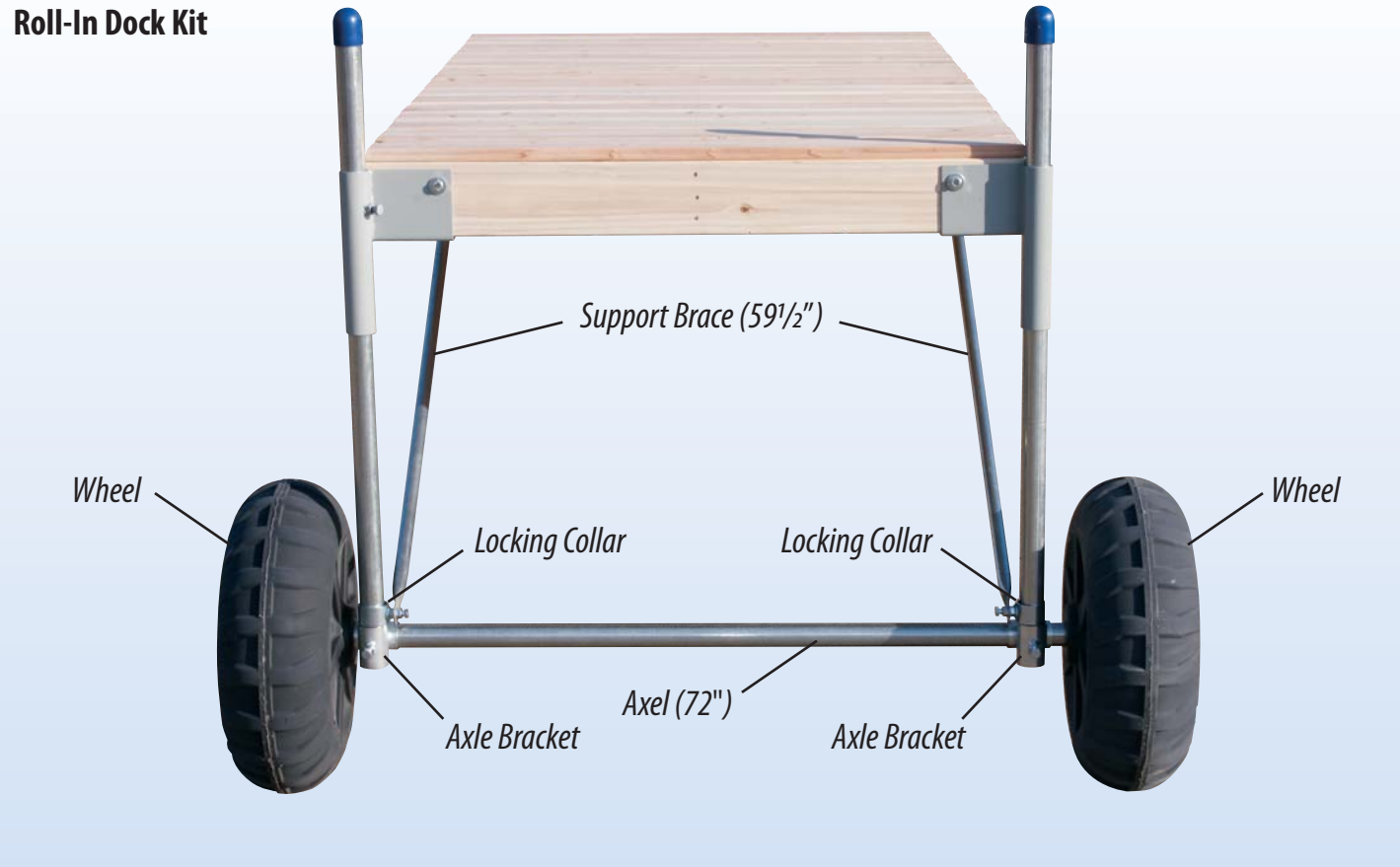

Detail Section

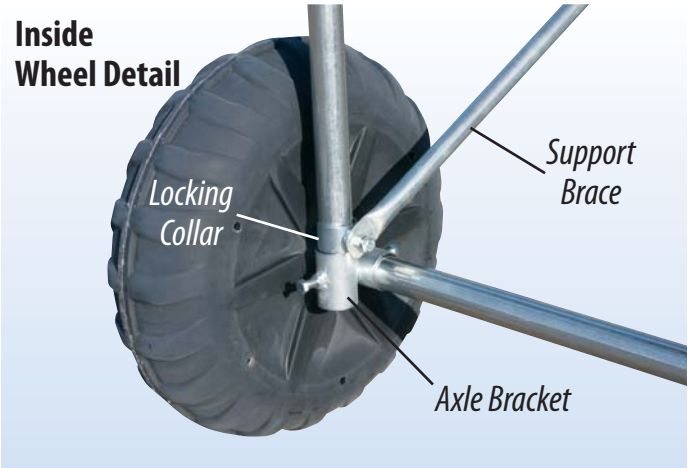

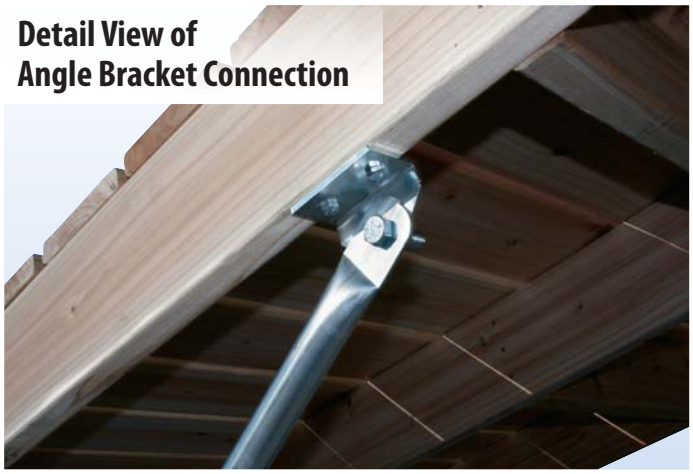

PO Box 1449
Wausau, WI 54402
715-842-3804
www.tommydocks.com